PTE MMMC Phono Pre-Amplifier Owner's Manual

Introduction:

Congratulations on your purchase of the PTE MMMC Phono-preamplifier. This is a high quality unit designed to accurately and quietly reproduce the grooves that move you. We know that you are anxious to get listening, but please take a few moments to read this manual so that you can properly set up the loading for your cartridge.

Your pre-amp was designed with care to provide excellent results with both moving magnet and moving coil cartridges. Pre amplifiers with just one set of inputs cannot be optimized for both types of cartridge. Moving coil inputs should have very low voltage noise while moving magnet inputs need to have very low current noise. The MMMC has inputs optimized for both types of cartridges.

In order to provide excellent imaging and proper tonal balance many hand-selected components are used so that the left and the right channels match with exceptional accuracy. The RIAA accuracy of this pre-amp is superb. The power supply in the MMMC is extremely quiet and has ultra low output impedance. The loading options available should provide a good match to almost all cartridges, and custom loading is available from PTE.

Cartridge Loading:

Presets. The unit is shipped preset to the following values:
MM input 47.5K
MC input 100 Ohms

If these values are what your cartridge manufacturer recommends you can hook up your pre-amp and start enjoying. If not, remove the bottom of the unit to set the dip-switches.

The only tool required to remove the bottom of your pre amp is a Phillips screwdriver. Turn the unit upside down and locate the four stainless screws. Remove these and then remove the four Phillips screws that attach the bottom of the unit to the wooden cover.

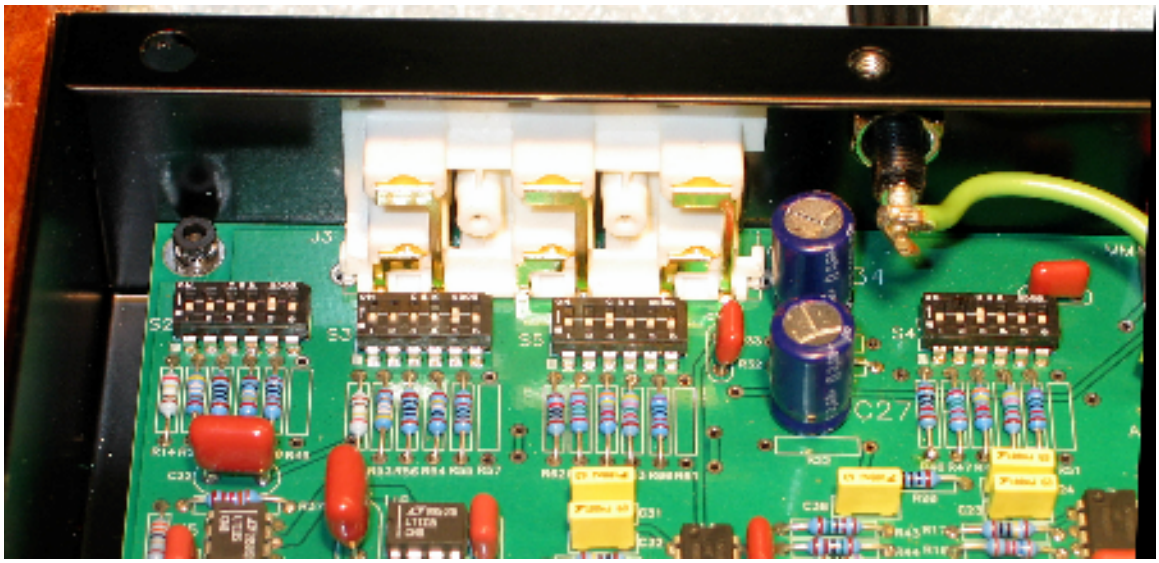

After removing the bottom of the enclosure the four dip switch banks are revealed. Banks labeled S2 and S3 are for the moving coil input. Banks S4 and S5 are for the moving magnet inputs. Each switch bank has six switches. You will note the sixth switch in each bank does not have a resistor and is not on the charts below. These switches are reserved for custom loading installed by PTE or your local dealer.

Switch banks S2 and S3 should be set identically. S5 and S4 should be set identically. The switches can be set using a toothpick or a fine tip ballpoint pen or any other small instrument. The charts below refer to the numbers on the banks. (1-5). Up is on and down is off.

MM loading chart for Banks S4 and S5

Swich 1	Switch 2	Switch 3	Switch 4	Switch 5	Cartridge Load in Kohms
10.0	25.5	34.8	47.5	75.0	4.9
10.0	25.5	34.8	47.5		5.3
10.0	25.5	34.8		75.0	5.5
10.0	25.5	34.8			6
10.0	25.5		47.5		6.2
10.0	25.5			75.0	6.6
10.0	25.5				7.2
10.0		34.8			7.8
10.0			47.5		8.2
10.0				75.0	8.8
10.0					10
	25.5	34.8			14.7
	25.5		47.5		16.6
	25.5			75.0	19
		34.8	47.5		20.1
		34.8		75.0	23.8
	25.5				25.5
			47.5	75.0	29
		34.8			34.8
			47.5		47.5
				75.0	75

To Use the Chart, locate the load in Kohms closest to your cartridge's recommended load, and note the numbers in that row. For example if 47K is the recommended load for your cartridge choose 47.5 on the chart and note that Switch 4 is the only one with a number. Simply set Switch 4 on in Bank S4 and S5. Set all the other switches off. In case your cartridge requires a very low load like 4.9K set all 5 of the switches on.

MC loading chart for Switches S2 and S3

Switch 1	Switch 2	Switch 3	Switch 4	Switch 5	Total load in Ohms
24.9	49.9	100.0	249.0	1000.0	13.3
24.9	49.9	100.0	249.0		13.5
24.9	49.9	100.0		1000.0	14
24.9	49.9	100.0			14.2
24.9	49.9		249.0		15.6
24.9	49.9			1000.0	16.3
24.9	49.9				16.6
24.9		100.0			19.9
24.9			249.0		22.6
24.9				1000.0	24.3
24.9					24.9
	49.9	100.0			33.3
	49.9		249.0		41.6
	49.9			1000.0	47.5
	49.9				49.9
		100.0	249.0		71.3
		100.0		1000.0	90.9
		100.0			100
			249.0	1000.0	199.4
			249.0		249
				1000.0	1000

To use the MC loading chart, find the number in the right column that is closest to your cartridge's recommended loading, and note the columns to the left that have numbers in them. For example, if your recommended loading is 30 ohms choose 33.3. The 33.3 ohm row indicates Switch 2 and Switch 3 should be set on in the S2 and S3 banks.

There may be a few cartridges with recommended loading outside of the ranges listed in the charts above. In those rare cases, Contact PTE, and we will arrange for a custom load resistor to be installed. Otherwise, your local dealer may be willing to install the required resistor in the empty locations under switch 6. Then simply set switch 6 on and set all other switches off. Specifically, for custom MM loading install R51 and R61. For custom MC loading, install R45 and R57.

The reason for correct cartridge loading may not be well understood by some. In order to clarify the reason for adjustable loading, the following page shows the different frequency responses that occur with different loading.

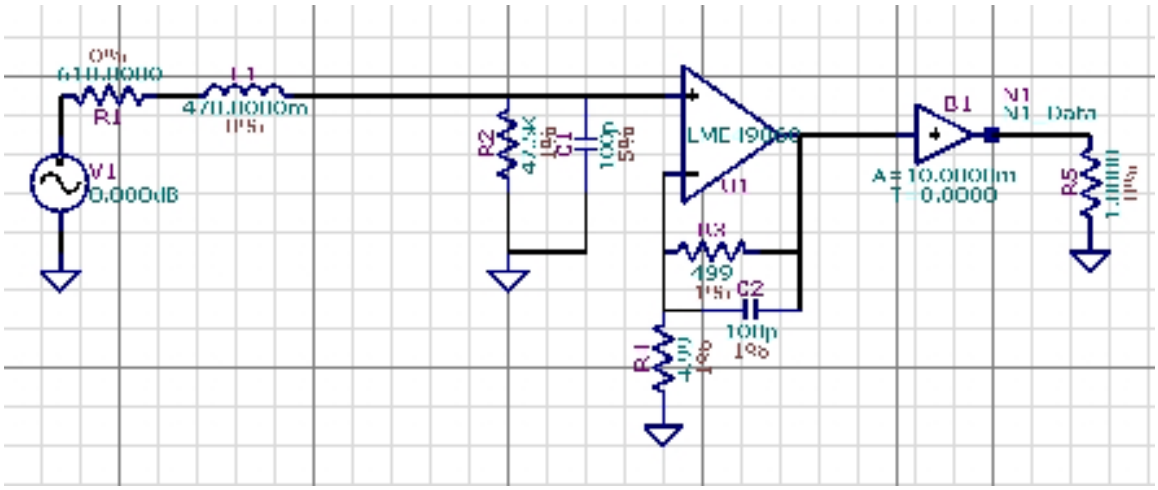

In the Model above, R1 and L1 model the resistance and inductance of a MM cartridge. The Pre amplifier input capacitance and the capacitance of the input lead is modeled by C1. The values of R1 and L1 are typical of a moving magnet cartridge. R2 is the loading resistance and the parameter that is varied in the following graph.

I have simulated the frequency response of this model with the five main values of loading resistance on Banks 4 and 5. Brown 10k, Black 25.5k, Pink, 34.8k, Red 47.5k, Blue 75K

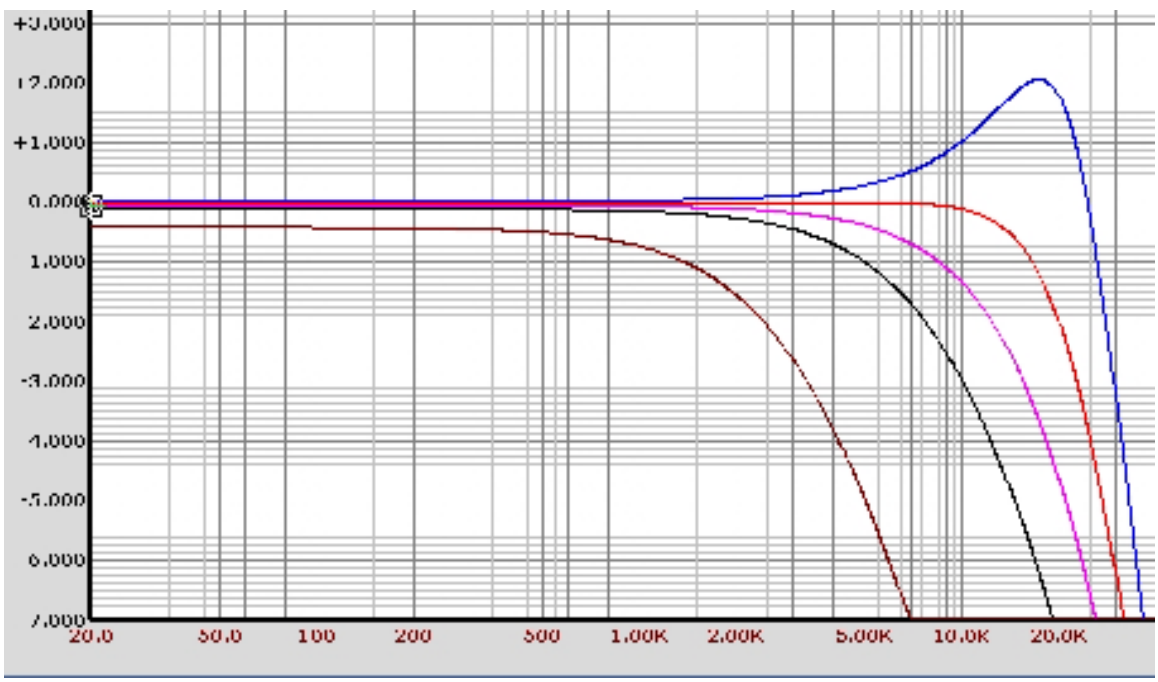

Clearly there are huge differences in the frequency response of this cartridge with different loading. Adding additional capacitance will not help this situation.

While none of these curves are particularly desirable they do show the effect of cartridge loading. We therefore recommend that you set the switches to match the manufacturer's recommendations. On the following page I show the results of a typical Moving Iron cartridge such as a Grado Prestige or the very fine offerings from Soundsmith. These cartridges have much lower inductance.

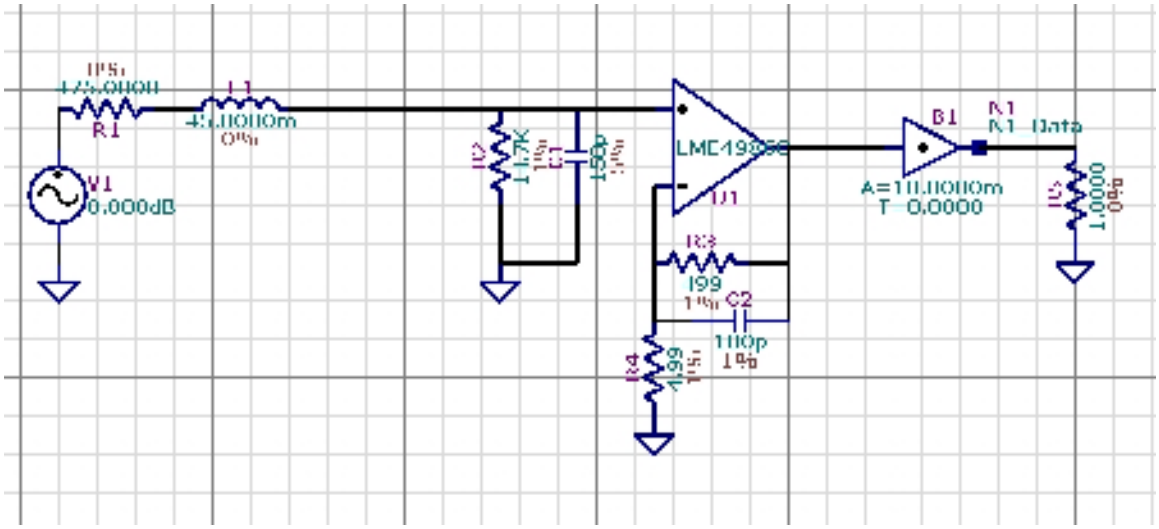

This circuit is a Model of a Grado Prestige Cartridge. Note that the inductance is more than 10 times lower than a typical moving magnet cartridge. This has the advantage of keeping the source impedance low, so noise currents coming out of the input stage are not converted into large noise voltages. The lower inductance also pushes the frequency response out farther before rolling it off.

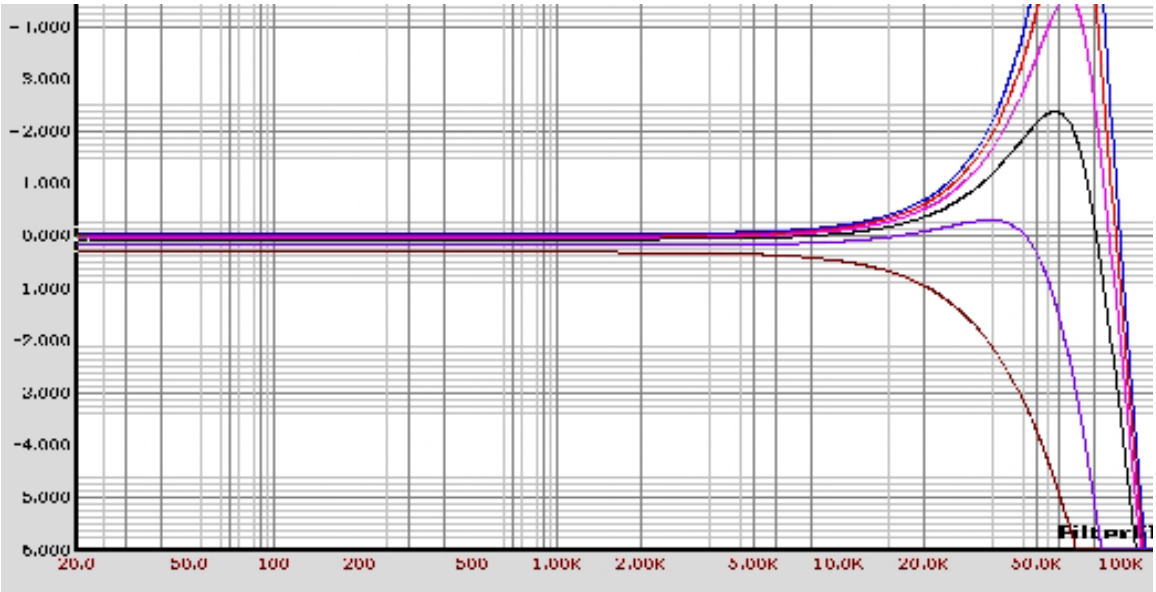

My simulations indicate that the optimum loading for this cartridge is not the recommended 47k, (the red curve heading toward a 6.8dB peak at 67K). While this curve might sound a little more detailed with its .6dB lift at 20 kHz, it will exacerbate the sound of ticks and pops due to ultrasonic ringing. The manufacturer's choice of 47k loading is probably due to the pervasiveness of this value in many preamplifiers.
I have listened to the sound of the 14.7k (purple curve) and found it to be smoother and more accurate with the Grado cartridges.

No modeling of moving coil cartridges is included here because their inductance is so low that the frequency response aberrations occur at very high frequencies.

Specifications:

Gain:	
Moving magnet input:	40 dB @ 1kHz
Moving coil input:	60 dB @ 1 kHz
Moving coil input loading:	21 values from 13.3 to 1000 Ohms
Moving magnet input loading:	21 values from 4.9k to 75K
Moving magnet input capacitance:	100pF

Signal to noise ratio. This specification was measured with the input shorted and is referenced to typical cartridge output. For moving magnet input 5mV, for moving coil input .5mV. The numbers below are unweighted and represent excellent performance.

MM input	74 dB unweighted
MC input:	70 dB unweighted
Output impedance:	100 ohms
RIAA matching:	.1 dB from 20Hz to 20 kHz.
Subsonic filtering:	None
PCB	Four layer